PROPRIETARY DATA
INFORMATION FURNISHED HEREIN IS THE PROPERTY OF DEN HARTOG INDUSTRIES INC. AND SHALL NOT BE USED, DISCLOSED TO OTHERS, OR COPIED WITHOUT EXPRESSED WRITTEN CONSENT OF DEN HARTOG IND. ALL RIGHTS RESERVED.

INFD15-19

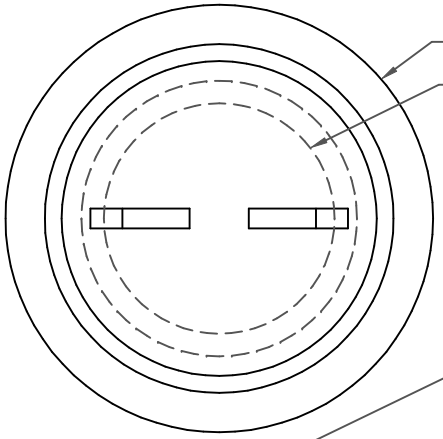

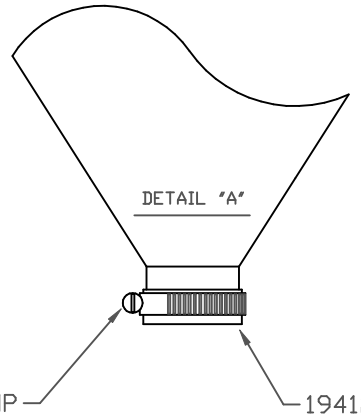

19413 HOSE CLAMP
TIGHTEN TO SECURE CAP PLUG FOR SHIPMENT. CLAMP MUST BE USED TO TIGHTEN AGAINST OUTLET FITTING INSTALLED BY CUSTOMER.

19412 CAP PLUG
TO PROTECT OUTLET FOR SHIPMENT

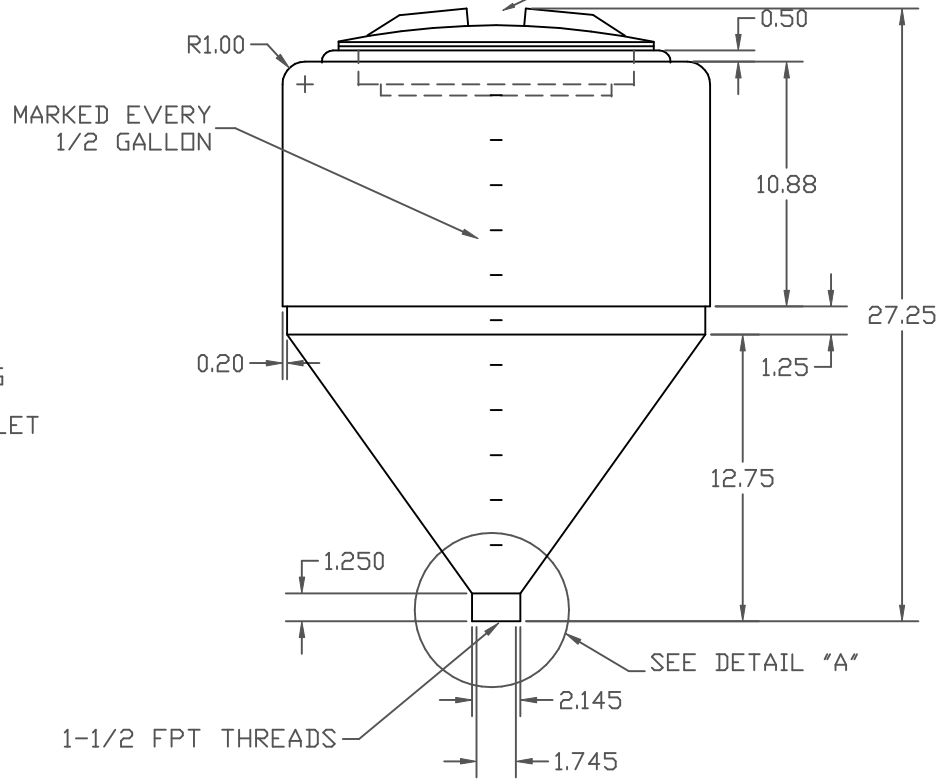

REV	DESCRIPTION	DATE APPRD.

ALL DIMENSIONS ARE IN DECIMAL INCHES
TOLERANCES UNLESS OTHERWISE SPECIFIED
± 1 % @ 68°F

DRAWN /DATE
DHJ 2/7/07

APPRD. /DATE
REH 6/29/07

THIRD ANGLE PROJECTION
ANSI 14.5M

MATERIAL
POLYETHYLENE
10 LBS.

NOTES:
0.20 WALL

Ace Roto-Mold
A DIVISION OF DEN HARTOG INDUSTRIES, INC.
4010 HOSPERS DRIVE SOUTH, BOX 425, HOSPERS, IOWA 51238

CLIENT / DESCRIPTION
15 GALLON INDUCTOR FULL DRAIN

SCALE
NONE

PART NO.
INFD15-19